DYNACIAT POWER TM

Water cooled
water chillers

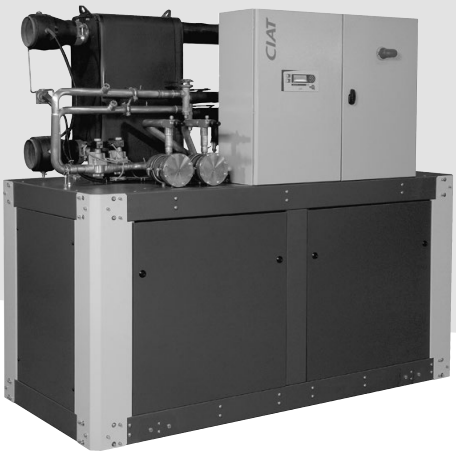

High energy efficiency

Compact and quiet

Scroll compressors

High-efficiency brazed-plate

heat exchangers

CIAT self-adjusting
electronic control

Cooling capacity: 200 to 700 kW
Heating capacity: 230 to 800 kW

Heating **Cooling only** **Cooling and heating** **R-410A**

EUROVENT CERTIFIED PERFORMANCE
www.eurovent-certification.com

Use

The new generation of **DYNACIAT POWER TM** water cooled water chillers offers an optimal solution for all heating or process cooling applications.

These units are designed to be installed in machine rooms that are protected against freezing temperatures and inclement weather.

The new range has been optimised to use ozone-friendly HFC R410A refrigerant. The use of this refrigerant guarantees compliance with the most demanding requirements for environmental protection and increased seasonal energy efficiency.

Range

DYNACIAT POWER TM LG series

Cooling-only or heating-only models with water cooled condenser.

The design of the DYNACIAT POWER TM LGP series heat pump range is identical to that of the DYNACIAT POWER TM LG series. These machines provide solutions for the most diverse heating problems.

They can also be used in cooling mode by reversing the cycle on the hydraulic circuits.

Acoustic configuration:

a - STANDARD version

b - LOW NOISE version. Compressor casing

c - XTRA LOW NOISE version. Casing with compressor acoustic insulation

Description

The DYNACIAT POWER TM LG series units are monoblock machines supplied as standard with the following components:
- Hermetic SCROLL compressors,
- Chilled water evaporator with brazed plates,
- Hot water condenser with brazed plates,
- Electrical power and remote control cabinet:
  - 400V-3ph-50Hz (+10%/-10%) general power supply + earth,
  - Transformer fitted as standard on the machine for supplying the remote control circuit with 230V-1ph-50Hz,
- CIAT CONNECT2 electronic control module.

The entire DYNACIAT POWER TM range complies with the following EC directives and standards:
- Machinery directive 2006/42/EC, modified
- Electromagnetic compatibility directive 2014/30/EU, modified
- EMC Immunity and Emissions EN 61800-3 “C3”
- Low voltage directive 2014/35/EU, modified
- RoHS 2011/65/EU
- Pressure equipment directive (PED) 2014/68/EU
- Machinery directive EN-60-204-1
- Refrigeration systems and heat pumps EN 378-2

Description

LG	>	Cooling only version	**1200**	>	Unit size
P	>	Heating only version	**V**	>	R410A refrigerant

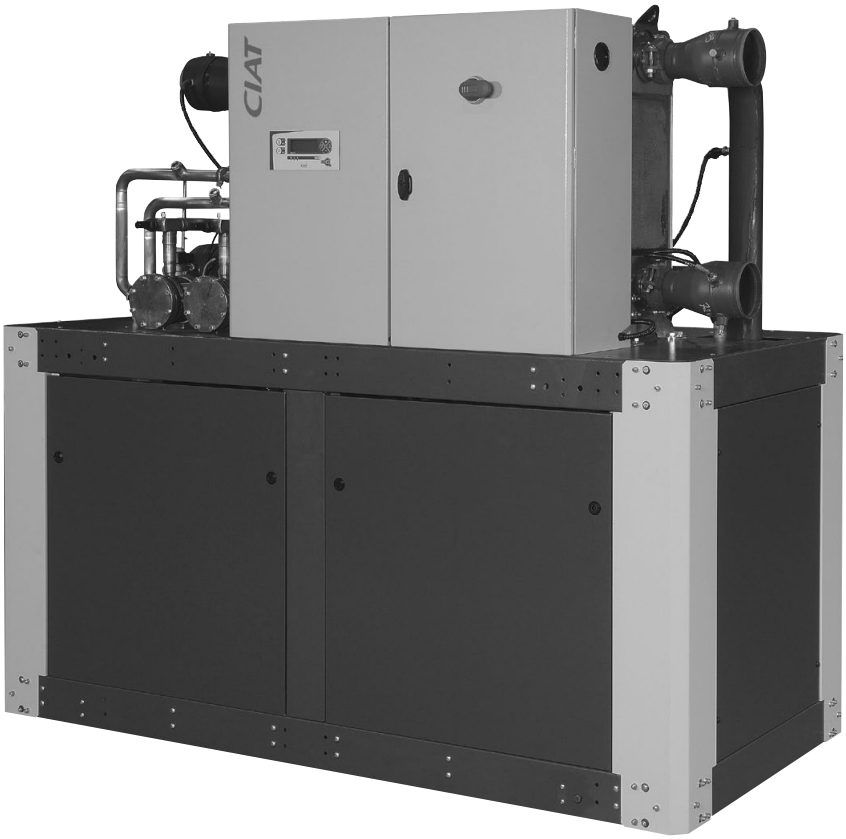

LG models 700V to 1600V
Xtra Low Noise Version

Description of the main components

Compressors
- Hermetic SCROLL type.
- Built-in electric motor, cooled by intake gases.
- Motor protected by internal winding thermostat.
- Placed on anti-vibration mounts.

Evaporator
- Brazed-plate exchanger.
- Stainless steel plates.
- Plate patterns optimised for high efficiency.
- Armaflex thermal insulation.

Condenser
- Brazed-plate exchanger.
- Stainless steel plates.
- Plate patterns optimised for high efficiency.

Refrigerating accessories
- Dehumidifier filters with rechargeable cartridges.
- Hygroscopic sight glasses.
- Solenoid valves on refrigerant lines (700V to 1200V models).
- Thermostatic expansion valves (700V to 1000V models).
- Electronic expansion valves (1100V to 2400V models).

Regulation and safety instruments
- High and low pressure sensors.
- High pressure safety valves.
- Water temperature control sensors.
- Evaporator antifreeze protection sensor.
- Factory-fitted evaporator water flow controller.

Electrics box
- IP 21.
- 400V-3Ph-50 Hz power supply + Earth (+10%/-10%).
- Disconnect switch with handle on front.
- Control circuit transformer.
- Circuit breaker for compressor motor.
- Contact switches for compressor motor.
- CONNECT2 microprocessor-controlled electronic control module.
- Wire numbering.
- Marking of the main electrical components.
- RAL 7035.

CONNECT2 electronic control module

The CIAT electronic control module performs the following main functions:
- Regulation of the chilled or hot water temperature
- Regulation of the water temperature based on the outdoor temperature (water law).
- Regulation for low temperature energy storage.
- Second setpoint management.
- Complete management of compressors with start-up sequence, metering and runtime balancing.
- Self-adjusting and proactive functions with adjustment of parameters on drift control.
- In-series staged capacity-reduction system on compressors based on cooling and heating demands.
- Management of compressor short cycle protection.
- Management of the machine operation limit according to outdoor temperature.
- Operating and fault status diagnostics.
- Management of a fault memory allowing a log of the last 20 incidents to be accessed, with operating readings taken when the fault occurs.
- Master/slave management of the two machines in parallel with runtime balancing and automatic changeover if a fault occurs on one machine.
- Machine time schedule.
- Display and access to the operating parameters via a multilingual LCD screen with 4 lines of 24 characters.

Remote management

CONNECT2 is equipped as standard with an RS485 serial port offering a range of remote management, monitoring and diagnostic options via the communication bus.

Several contacts are available as standard which enable the DYNACIAT POWER TM to be controlled remotely by wired link:
- Automatic operation control: when this contact is open, the machine stops.
- Setpoint 1/setpoint 2 selector: when this contact is closed, a second cooling setpoint is activated (energy storage mode, for example).
- Heating/cooling operating mode selection: this input switches from one operating mode to another.

  Contact closed = heating mode.

  Contact open = cooling mode.
- Setpoint adjustable via 4-20 mA signal: this input is used to adjust the setpoint in heating or cooling mode.
- Compressor load shedding: closing the contact(s) concerned allows the power or refrigerating consumption of the machine to be limited by stopping one or more compressors.
- Water pump 1 and 2 control: these outputs control the switches for one or two water pumps.
- Fault reporting: this contact indicates the presence of a major fault which has caused one or both refrigerating circuits to stop.

Power control

In-series staged power control system on the compressors:
- 4 stages for 700V to 1600V models.
- 6 stages for 1800V and 2400V models.
- 8 stages for 2100V models.

Casing

Casing made from RAL 7024 and RAL 7035 painted panels.

DESCRIPTION OF THE MAIN COMPONENTS

BluEdge® Digital, the CIAT supervision solution

BluEdge® Digital is a remote supervision solution dedicated to monitoring and controlling several CIAT machines in real time.

Advantages

- Access to the operating trend curves for analysis
- Improved energy performance
- Improved availability rate for the machines

Functions

BluEdge® Digital will send data in real time to the supervision website.

The machine operating data can be accessed from any PC, smartphone or tablet.

Any event can configured to trigger a mail alert.

Parameters monitored:
- Overview
- Control panel for the controllers
- Events
- Temperature curves

Monthly and annual reports are available to analyse:
- The performance and operation of the machine Example: operating curves and time, number of compressor start-ups, events, preventive maintenance actions to be performed, etc.

Incidents such as a drift in the measurements on a temperature sensor, incorrectly set control parameters, or even incorrect settings between one compressor stage and the other, are immediately detected, and the corrective actions put in place.

Equipment

This kit box be used on both machines which are already in use (existing inventory), or on new machines.
- 1 transportable cabinet

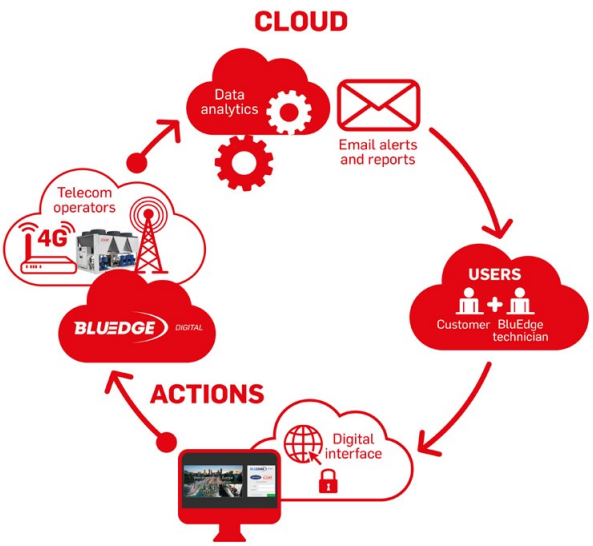

Contents of the box (avalable in 230v and 400v)

- 1 GPRS / 4G LTE-M modem
- 1 SIM SMART card
- 1 24 VDC power supply
- 1 power protection device
- 1 GSM antenna
- Rail mounting
- Enclosed casing to protect the equipment during transport
- Packing box for cable routing (bus, power supply)

Compatibility

Up to five machines per box

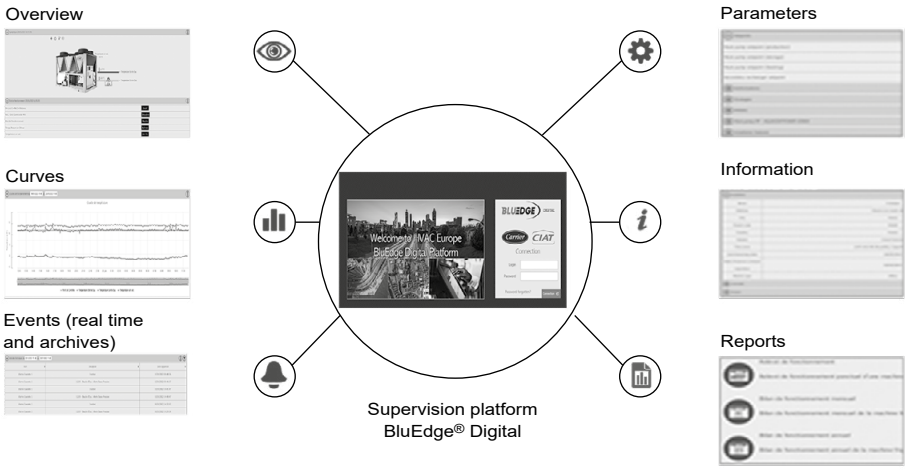

STANDARD EQUIPMENT/AVAILABLE OPTIONS

DYNACIAT POWER TM LG	700V to 2400V
Low-temperature glycol/water mix (0°C to -12°C)	●
Safety switch	●
Control circuit transformer	●
Electrical cabinet wire numbers	●
RS485 communication interface	●
Water flow controller	●
Master/slave control of two machines	●
ETHERNET gateway MODBUS	●
Electronic expansion valve (1)	▲
Low Noise version (compressor casing)	▲
Xtra Low Noise version (compressor casing with acoustic insulation)	▲
Compressor intake shut-off valves	▲
Soft start	▲
Electrical energy meter	▲
Water filter on evaporator and condenser	▮
Phase controller (reversal, loss, asymmetry)	▮
Anti-vibration mounts	▮
Flanged connections	▮
Flexible hydraulic couplings on evaporator and condenser	▮
Relay board with dry contacts	▮
LONWORKS/BACNET gateway	▮
Outdoor temperature sensor	▮

● Supplied as standard
▲ Factory-mounted option
▮ Option supplied as a kit
(1) Standard equipment for 1100V to 2400V models

Seasonal performance, cooling mode

Most central air conditioning systems installed in the tertiary sector in Europe use water chillers to provide refrigeration.

Analyses of installed systems show that the heat load varies from season to season and that a water chiller operates at reduced capacity for the majority of the time.

The efficiency under partial load is therefore essential when choosing a water chiller. It is with this in mind that the new DYNACIAT POWER TM range was designed. In particular, the entire range uses R410A refrigerant which, thanks to its thermodynamic performance, makes it possible to obtain much higher seasonal efficiency ratings.

As its compressors are connected in parallel on the same refrigerating circuit, the DYNACIAT POWER TM easily and efficiently adjusts the cooling capacity to the system's needs. The self-adjusting Connect Touch control anticipates variations in load and starts only the number of compressors needed. This ensures optimum operation of the compressors and guarantees energy efficiency for the majority of the system's life.

The (**S**easonal **E**nergy **E**fficiency **R**atio) **(SEER)** measures the seasonal energy efficiency of liquid chillers **for comfort applications** by calculating the ratio between the annual cooling demand of the building and the chiller's annual energy demand. It takes into account the energy efficiency for each outdoor temperature weighted by the number of hours observed for each of these temperatures, using actual climate data.

The **SEER** is a new way of measuring the energy efficiency of liquid chillers for **comfort applications** over an entire year. The new indicator provides a more realistic overview of the cooling system's energy efficiency and its actual impact on the environment. (Ecodesign regulation 2016/2281).

The (**S**easonal **E**nergy **P**erformance **R**atio) **(SEPR)** measures the seasonal energy efficiency of liquid chillers for process applications by calculating the ratio between the annual process cooling demand and the chiller's annual energy demand. It takes into account the energy efficiency at each outdoor temperature for the average European climate weighted by the number of hours observed for each of these temperatures.

The **SEPR** is a new way of measuring the energy efficiency of process liquid chillers over an entire year. The new indicator provides a more realistic overview of the cooling system's energy efficiency and its actual impact on the environment (Ecodesign regulation 2015/1095 and 2016/2281)

Seasonal performance, heating mode

The European «Ecodesign» directive takes into account the product's environmental impact throughout its life cycle. It defines the mandatory energy efficiency requirements for water chillers and heat pumps.

Products that do not meet the energy efficiency requirements set by the new directive will gradually be phased out of the market, forcing manufacturers to develop and offer more efficient products.

Like the ESEER relating to water chillers, the new seasonal coefficient of performance (SCOP) resulting from this new European directive is used to evaluate the energy efficiency of heat pumps. Until now, only the COP has been used to measure energy efficiency in heating mode.

The COP was exclusively calculated using a single measuring point, and only took into account operation at full load, which did not represent the efficiency of the heat pump over an entire heating season.

The purpose of the SCOP is to characterise the seasonal efficiency of the heat pump by taking into account the full-load and part-load performances established for several outdoor temperature values. The SCOP is the ratio between the building's annual heating demand and the annual electricity consumption of the heating system. It is measured in accordance with the EN14825 standard based on an average reference climate that takes into account several reference temperatures between -10 °C and +16 °C

Primary energy evaluation

In order to compare the energy efficiency of products using different energy sources, the Ecodesign directive introduced a new seasonal energy efficiency calculation known as Ηs (Greek letter eta followed by the letter «s» for seasonal) and expressed as a percentage. For heat pumps, the SCOP (final energy) value is transposed to Ηs (primary energy) by taking into account a conversion coefficient of 2.5 which corresponds to the average efficiency of the electrical production and various corrections for the responsiveness of the regulation system (i = 8 for water-to-water heat pumps).

$$\eta s\ (\%) = \frac{(SCOP(kW/kW)\times 100)}{2{,}5} - \sum i \text{ corrections}$$

The minimum seasonal efficiency requirements to be met by low temperature heat pumps, set by the standard, are as follows:

ηs = 125%, which is a minimum SCOP of 3.33 valid from September 2017.

The DYNACIAT POWER TM complies with the European Ecodesign 2017 directive, offering SCOP values greater than 3.33 across the entire range.

TECHNICAL SPECIFICATIONS

DYNACIAT POWER TM LG				700V	800V	900V	1000V	1100V	1200V	1400V	1600V	1800V	2100V	2400V
Heating														
Standard unit Seasonal energy efficiency**	HA1	**SCOP $_{30/35°C}$**	**kW / kW**	**5,30**	**5,53**	**5,45**	**5,47**	**5,43**	**5,49**	**5,49**	**5,48**	**5,44**	**5,46**	**5,24**
		ηs heat $_{30/35°C}$	**%**	**204**	**213**	**210**	**211**	**209**	**212**	**212**	**211**	**210**	**211**	**202**
		P_{rated}	**kW**	**246**	**293**	**335**	**384**	**419**	**463**	**530**	**593**	**687**	**795**	**876**
Cooling														
Standard unit Full load performances*	CA1	Net cooling capacity	kW	203	242	278	320	348	382	439	495	574	651	703
		Net power input	kW	49	56	64	71	79	86	97	108	125	145	165
		EER	kW / kW	4,18	4,32	4,33	4,50	4,42	4,42	4,55	4,60	4,60	4,49	4,27
Standard unit Seasonal energy efficiency**		**SEPR $_{-2/-8°C}$ Process medium temp *****	**kWh/ kWh**	**3,89**	**4,03**	**3,87**	**4,18**	**3,97**	**4,16**	**4,41**	**4,47**	**4,51**	**4,54**	**4,69**
Standard unit Seasonal energy efficiency**		SEER $_{12/7°C}$ Comfort Low temp.	kW / kW	5,22	5,47	5,48	5,42	5,41	5,31	5,34	5,24	5,35	5,23	4,86
Standard unit		Lw / Lp (1)	dB(A)	89/57	90/58	90/58	89/57	90/58	91/59	95/63	96/64	93/61	95/63	97/65
Unit + Low Noise option		Lw / Lp (1)	dB(A)	84/52	85/53	85/53	86/54	87/55	88/56	90/58	91/59	89/57	90/58	91/59
Unit + Xtra Low Noise		Lw / Lp (1)	dB(A)	79/47	80/48	80/48	80/48	81/49	82/50	85/53	86/54	85/53	86/54	87/55
Refrigerating circuit														
Refrigerant (GWP)				R410 (GWP=2088)										
Number				2										
Refrigerant circuit 1			kg	13,5	15,5	16,4	17	19,7	21,3	21,5	23	31	33	34
Refrigerant circuit 2			kg	14	15	16,4	17,2	19,7	21,3	21	22	31	34	34
Tonne of CO_2 equivalent			TCO_2Eq	57,42	63,68	68,49	71,41	82,27	88,95	88,74	93,96	129,46	139,9	141,98
Compressor														
Type				Hermetic SCROLL - 2900 rpm										
Number				4								6		
Start-up mode				Direct in line in series										
Capacity control			Number of stages	6	4	6	4	6	4	6	4	6	8	6
			%	100-78-71-50-28-21-0	100-75-50-25-0	100-78-71-50-28-21-0	100-75-50-25-0	100-78-71-50-28-21-0	100-75-50-25-0	100-78-71-50-28-21-0	100-75-50-25-0	100-83-66-50-33-16-0	100-84-66-48-36-30-18-15-0	100-83-66-50-33-16-0
Type of oil for R410A				Polyolester POE 160SZ (32cP)						Polyolester POE 3MAF (32cst)				
Oil capacity per circuit			l	6,7 + 6,7	6,7 + 6,7	6,7 + 6,7	6,7 + 6,7	6,7 + 7,2	7,2 + 7,2	6,3 + 6,3	6,3 + 6,3	3 x 6,3	3 x 6,3	3 x 6,3
Evaporator														
Type/Number				Brazed-plate heat exchanger/ 1										
Water capacity			l	20	23	26	29	32	37	50	57	64	77	
Hydraulic connection			Ø	VICTAULIC DN100			VICTAULIC DN125					VICTAULIC DN150		
Max. pressure, water end			bar	10 bars										
Min/max water flow rate			m^3/h	22 / 70	26 / 81	29 / 92	33 / 105	35 / 113	38 / 124	44 / 137	51 / 151	61 / 150	68 / 150	74 / 150

*	In accordance with standard EN14511-3:2018.
**	In accordance with standard EN14825:2018, average climate
***	With EG 30%.
HA1	Heating mode conditions: Water heat exchanger water entering/leaving temperature 30°C/35°C, outside air temperature tdb/twb = 7°C db/6°C wb, evaporator fouling factor 0 m^2. k/W.
CA1	Cooling mode conditions: evaporator water inlet/outlet temperature 12 °C/7 °C, outdoor air temperature 35 °C, evaporator fouling factor 0 m^2. k/W
ηs heat $_{30/35°C}$ & SCOP $_{30/35°C}$	**Values in bold comply with Ecodesign Regulation (EU) No. 813/2013 for Heating applications.**
SEER 12/7°C	Values calculated according to EN14825:2018.
SEPR $_{-2/-8°C}$	**Values in bold comply with Ecodesign Regulation (EU) No. 2015/1095 for Process application**
(1)	**Lw** : overall power level in accordance with standard ISO3744 **Lp** : overall pressure level at 10 metres in a free field calculated using the formula Lp=LW-10logS

EUROVENT CERTIFIED PERFORMANCE
www.eurovent-certification.com

Eurovent certified values

TECHNICAL SPECIFICATIONS

DYNACIAT POWER TM LG		700V	800V	900V	1000V	1100V	1200V	1400V	1600V	1800V	2100V	2400V
Water condenser												
Type/ Number		Brazed-plate heat exchanger/ 1										
Water capacity	l	23	26	29	32	37	40	55	61	73	77	77
Hydraulic connection	Ø	VICTAULIC DN100			VICTAULIC DN125					VICTAULIC DN150		
Max. pressure, water end	bar	10 bars										
Min/max water flow rate	m^3/h	19/ 64	22/ 74	25/ 84	28/ 95	31/ 103	33/ 112	38/ 129	43/ 143	52/ 150	59/ 150	66/ 163
Dimensions												
Length	mm	2099						2499		3350		
Width	mm	996										
Height	mm	1869						1887		1970		
Weight												
Weight (empty)	kg	1044	1156	1189	1312	1363	1425	1613	1708	2284	2376	2418
Weight in operation	kg	1088	1205	1246	1378	1436	1510	1713	1818	2472	2588	2637
Max. storage temperature	°C	+50°C										

ELECTRICAL DATA

DYNACIAT POWER TM LG		700V	800V	900V	1000V	1100V	1200V	1400V	1600V	1800V	2100V	2400V
COMPRESSOR												
Voltage	V	400V - 3Ph - 50Hz (+10/- 10%)										
Maximum nominal current	A	140	160	182	205	218	232	266	295	356	399	443
Starting current (1)	A	316	334	391	414	480	494	586	615	607	720	763
Starting current with Soft Start option (1)	A	230	248	287	310	352	366	429	458	483	562	605
REMOTE CONTROL AUXILIARY CIRCUIT												
Voltage	V	230V - 1Ph - 50Hz (+10/- 10%)										
Maximum nominal current	A	0,8						1,3				
Transformer capacity	VA	160						250				
Machine protection rating		IP 21										

(1) Starting current of largest compressor + maximum current of other compressors under full load
Cable selection nominal current = sum of maximum nominal currents in above tables

SOUND LEVELS

STANDARD version (without noise insulation on compressors)

Sound power level ref 2 x 10^{-12} Pa ±3 dB (Lw)

DYNACIAT POWER TM	SOUND POWER LEVEL SPECTRUM (dB)						Overall power level dB(A)
	125 Hz	250 Hz	500 Hz	1000 Hz	2000 Hz	4000 Hz	
700V	75	78	84	80	84	80	89
800V	77	78	83	81	87	81	90
900V	76	77	86	82	85	80	90
1000V	75	75	88	83	82	78	89
1100V	77	82	89	85	82	78	90
1200V	78	84	90	87	81	77	91
1400V	82	90	85	90	91	85	95
1600V	82	90	85	91	92	87	96
1800V	90	89	91	88	86	83	93
2100V	90	90	90	91	89	84	95
2400V	90	90	90	92	91	85	97

Sound pressure level ref 2 x 10^{-5} Pa ±3 dB (Lp)

Measurement conditions: free field, 10 metres from machine, 1.50 metres from ground, directivity 2.

DYNACIAT POWER TM	SOUND POWER LEVEL SPECTRUM (dB)						Overall power level dB(A)
	125 Hz	250 Hz	500 Hz	1000 Hz	2000 Hz	4000 Hz	
700V	43	46	52	48	52	48	57
800V	45	46	51	49	55	49	58
900V	44	45	54	50	53	48	58
1000V	43	43	56	51	50	46	57
1100V	45	50	57	53	50	46	58
1200V	46	52	58	55	49	45	59
1400V	50	58	53	58	59	53	63
1600V	50	58	53	59	60	53	64
1800V	58	57	59	56	54	51	61
2100V	58	58	58	59	57	52	63
2400V	58	58	58	60	59	53	65

NB: Sound pressure levels depend on the installation conditions of each system. As such, the levels listed here are given for information only. Only the sound power levels are comparable and certified.

SOUND LEVELS

LOW NOISE version (compressor casing)

Sound power level ref 2 x 10^{-12} Pa ±3 dB (Lw)

DYNACIAT POWER TM	SOUND POWER LEVEL SPECTRUM (dB)						Overall power level dB(A)
	125 Hz	250 Hz	500 Hz	1000 Hz	2000 Hz	4000 Hz	
700V	80	78	83	76	77	74	84
800V	82	78	82	76	79	76	85
900V	81	77	85	77	78	74	85
1000V	80	75	87	78	75	73	86
1100V	82	82	88	81	74	72	87
1200V	83	84	89	82	74	71	88
1400V	87	90	84	85	83	80	90
1600V	87	90	84	87	85	81	91
1800V	89	87	87	81	80	79	89
2100V	89	88	87	84	82	80	90
2400V	89	88	87	86	84	80	91

Sound pressure level ref 2 x 10^{-5} Pa ±3 dB (Lp)

Measurement conditions: free field, 10 metres from machine, 1.50 metres from ground, directivity 2.

DYNACIAT POWER TM	SOUND POWER LEVEL SPECTRUM (dB)						Overall power level dB(A)
	125 Hz	250 Hz	500 Hz	1000 Hz	2000 Hz	4000 Hz	
700V	48	46	51	44	45	42	52
800V	50	46	50	44	47	44	53
900V	49	45	53	45	46	42	53
1000V	48	43	55	46	43	41	54
1100V	50	50	56	49	42	40	55
1200V	51	52	57	50	42	39	56
1400V	55	58	52	53	51	48	58
1600V	55	58	52	55	53	49	59
1800V	57	55	55	49	48	47	57
2100V	57	56	55	52	50	48	58
2400V	57	56	55	54	52	48	59

NB: Sound pressure levels depend on the installation conditions of each system. As such, the levels listed here are given for information only. Only the sound power levels are comparable and certified.

SOUND LEVELS

XTRA LOW NOISE version (compressor casing with noise insulation)

Sound power level ref 2 x 10^{-12} Pa ±3 dB (Lw)

DYNACIAT POWER TM	SOUND POWER LEVEL SPECTRUM (dB)						Overall power level dB(A)
	125 Hz	250 Hz	500 Hz	1000 Hz	2000 Hz	4000 Hz	
700V	78	75	76	67	73	72	79
800V	79	75	75	68	75	73	80
900V	79	74	78	69	74	72	80
1000V	78	73	80	70	71	70	80
1100V	79	79	81	72	70	70	81
1200V	80	81	82	74	70	69	82
1400V	84	87	77	77	79	77	85
1600V	84	88	77	78	81	79	86
1800V	87	84	84	76	75	75	85
2100V	88	84	83	79	78	76	86
2400V	89	84	83	81	79	77	87

Sound pressure level ref 2 x 10^{-5} Pa ±3 dB (Lp)

Measurement conditions: free field, 10 metres from machine, 1.50 metres from ground, directivity 2.

DYNACIAT POWER TM	SOUND POWER LEVEL SPECTRUM (dB)						Overall power level dB(A)
	125 Hz	250 Hz	500 Hz	1000 Hz	2000 Hz	4000 Hz	
700V	46	43	44	65	41	40	47
800V	47	43	43	36	43	41	48
900V	47	42	46	37	42	40	48
1000V	46	41	48	38	39	38	48
1100V	47	47	49	40	38	38	49
1200V	48	49	50	42	38	37	50
1400V	52	55	45	45	47	45	53
1600V	52	56	45	46	49	47	54
1800V	55	52	52	44	43	43	53
2100V	56	52	51	47	46	44	54
2400V	57	52	51	49	47	45	55

NB: Sound pressure levels depend on the installation conditions of each system. As such, the levels listed here are given for information only. Only the sound power levels are comparable and certified.

Evaporator limits

The curves show the minimum and maximum allowable temperature differences for chilled water or glycol/water solution based on the outlet temperature.

Example:

For a water outlet temperature of +5°C
- The minimum difference is 2.6°C, which gives a water temperature of 7.6 / 5°C
- The maximum difference is 6°C, which gives a water temperature of 11 / 5°C

For temperature differences not included between the two curves, please contact us.

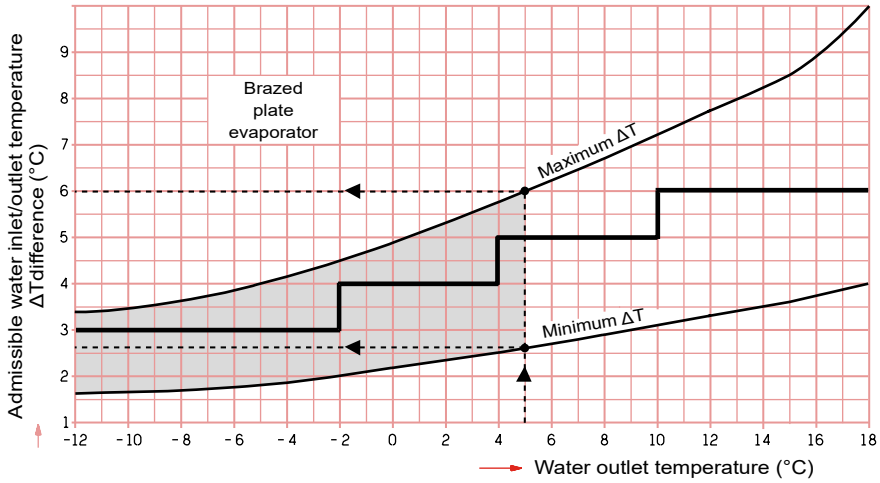

Calculation ΔT for performance tables

Condenser limits

DYNACIAT POWER TM	LG
Minimum ΔT °C	5
Maximum ΔT °C	10

IMPORTANT : To ensure that units operate correctly, especially during the startup phases, with a condenser cold water loop, a device must be fitted to ensure a minimum condenser fluid inlet temperature of 20°C is reached very quickly (e.g. 3-way valve).

Correction coefficients for Ethylene glycol

Evaporator – Condenser

volume percent concentration of ethylene glycol	Multiplier correction factor		
	Cooling capacity	Water flow rate	Pressure drops
10	0,99	1,05	1,05
20	0,985	1,10	1,10
30	0,98	1,15	1,15
40	0,97	1,20	1,23

Glycol concentration required

Volume concentration in %		0	10	20	30	40
Ethylene glycol	Freezing point °C	0	-4	-10	-18	-27
	Minimum water outlet °C	5	+3	-1	-7	-14
Propylene glycol	Freezing point °C	0	-4	-9	-16	-25
	Minimum water outlet °C	5	+4	+1	-4	-9

Minimum chilled water volume (cooling mode)

The CONNECT 2 control is equipped with anticipation logic making it highly flexible in adjusting operation to changes in parameters, particularly on hydraulic systems with low water volumes.

By adjusting compressor runtimes, it prevents short-cycle protection functions from starting and, in most cases, eliminates the need for a buffer tank.

DYNACIAT POWER TM LG	700V	800V	900V	1000V	1100V	1200V	1400V	1600V	1800V	2100V	2400V
Min. volume Installation (litres)	636	880	844	1146	1043	1346	1286	1735	1262	1336	1595

NB: The minimum volumes of chilled water are calculated for the following conditions:
- Chilled water temperature in evaporator: 12°C/7°C
- Condenser water temperature: 30°C/35°C

The calculation of the minimum water volume is given for EUROVENT rated conditions, in cooling mode only.

This value is applicable for most air conditioning applications (unit with fan coil units)

Note:

For installations running with a low volume of water (assembly with air handling unit) or for industrial processes, the buffer tank is a required component.

Operating range

DYNACIAT POWER TM LG

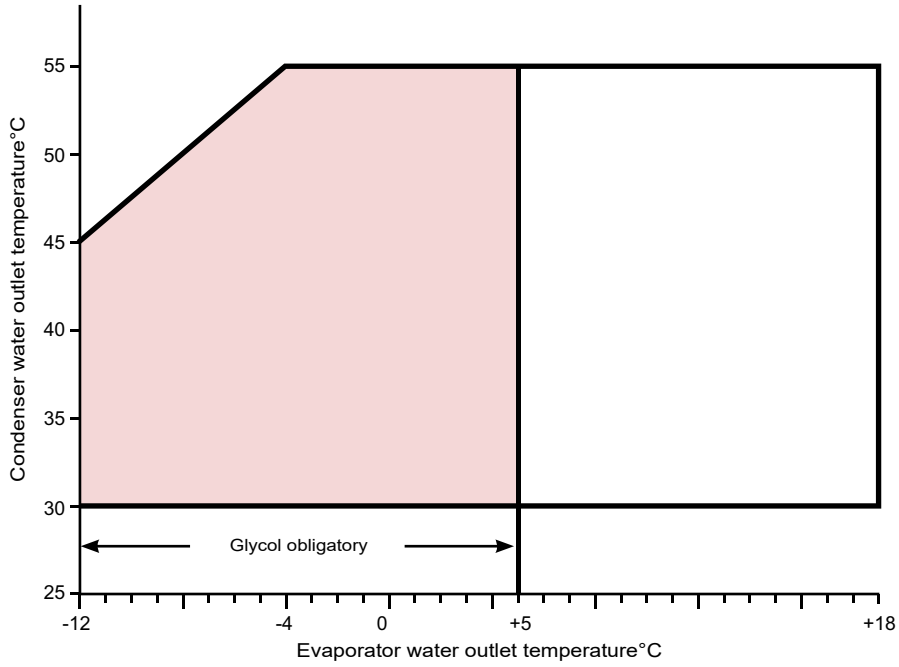

HYDRAULIC SPECIFICATIONS

DYNACIAT POWER TM LG evaporator water pressure drop

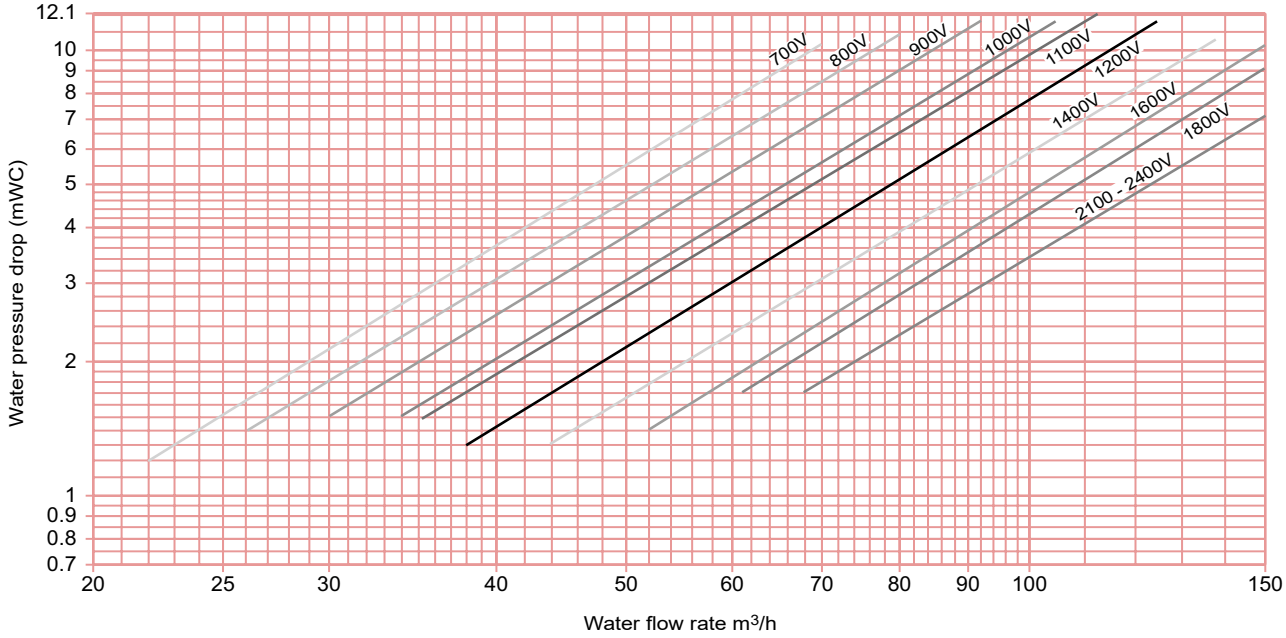

DYNACIAT POWER TM LG condenser water pressure drop

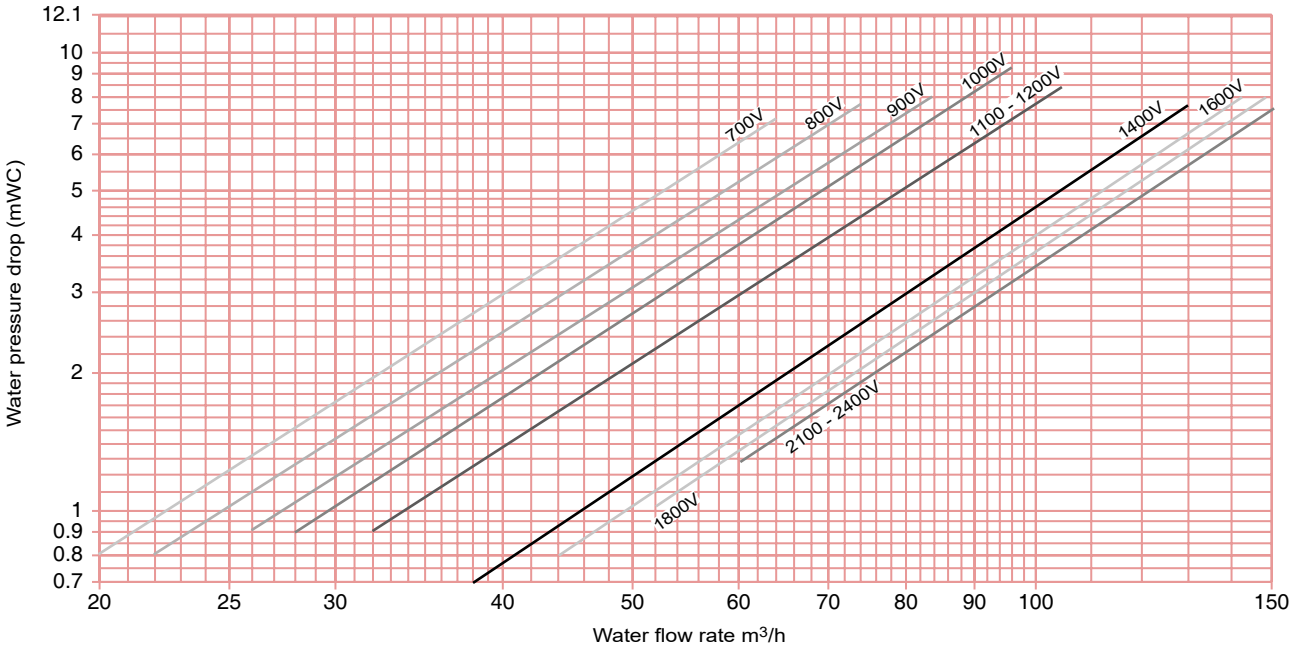

Do not extrapolate the curves. Always stay within minimum and maximum flow rate values.

Hydraulic specifications

- **Condenser and evaporator filter water pressure drop**

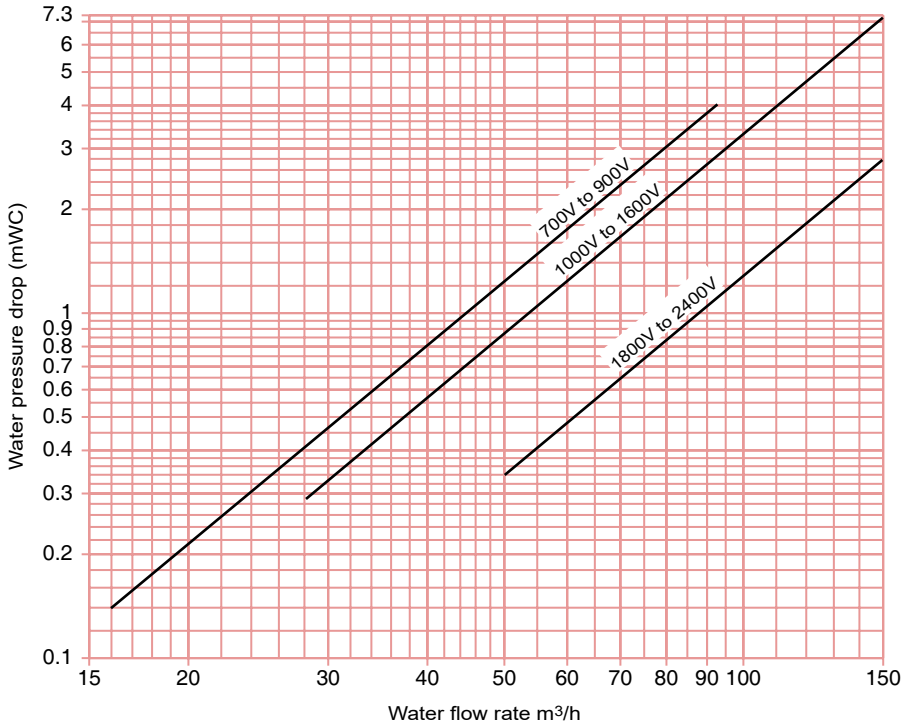

Dimensions

700V to 1600V models

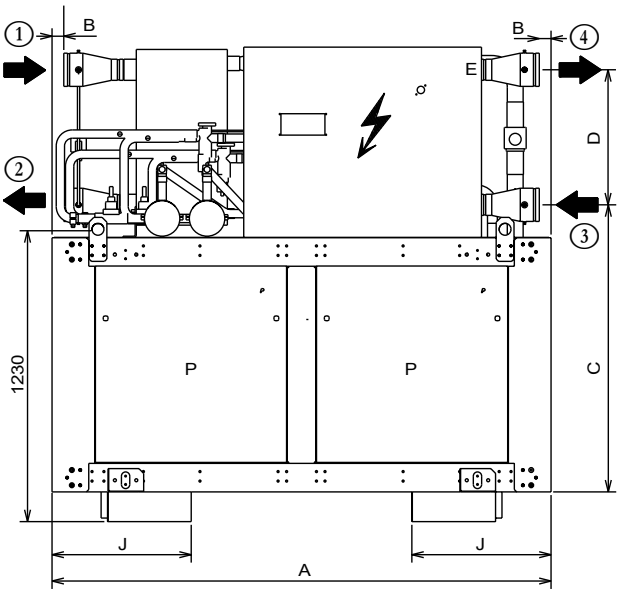

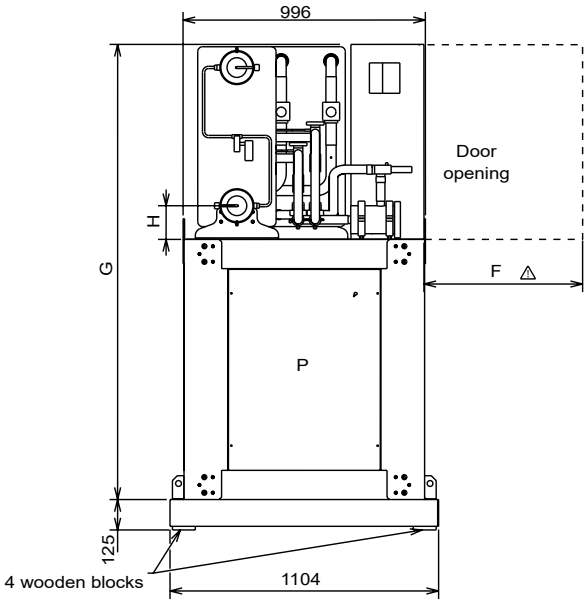

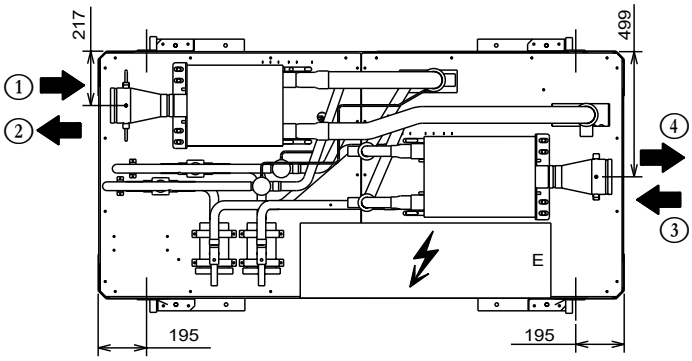

E Electrical connection on the side

P Noise insulation panels option

Models	Dimensions (mm)								Chilled water		Hot water		Weight (kg)	
	A	B	C	D	F	G	H	J	Input 1	Outlet 2	Input 3	Outlet 4	empty	in operation
700V	2099	49	1207	568	1000	1869	137	585	VICTAULIC DN 100		VICTAULIC DN 100		1044	1088
800V													1156	1205
900V													1189	1246
1000V									VICTAULIC DN 125		VICTAULIC DN 125		1312	1378
1100V													1363	1436
1200V													1425	1510
1400V	2499	60	1240	532	600	1887	170	715					1613	1713
1600V													1708	1818

Dimensions

1800V to 2400V models

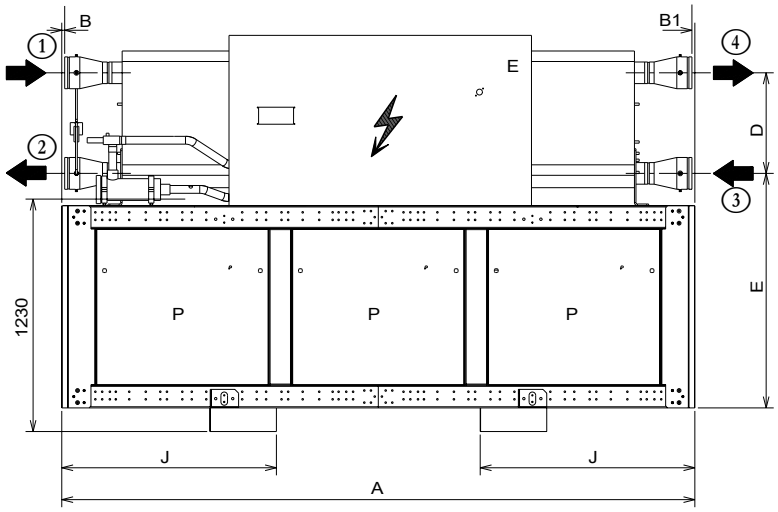

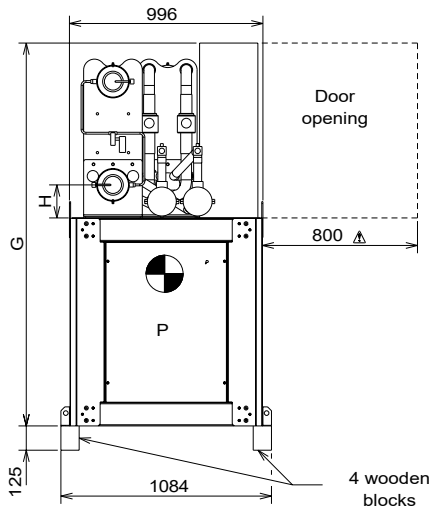

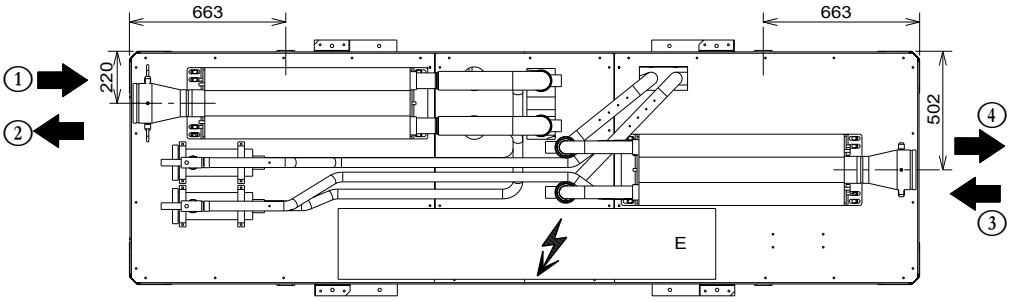

E Electrical connection on the side

P Noise insulation panels option

Models	Dimensions (mm)								Chilled water		Hot water		Weight (kg)	
	A	B	B1	C	D	G	H	J	Input 1	Outlet 2	Input 1	Outlet 2	empty	in operation
1800V	3350	159	63	1240	532	1970	170	1135	VICTAULIC DN 150		VICTAULIC DN 150		2284	2472
2100V		15	15										2376	2588
2400V													2418	2637

Anti-vibration mounts (option)

Anti-vibration mounts must be installed beneath the unit for applications that generate extremely low vibrations.
The mounts must be placed at the locations illustrated below.

700V to 1600V models

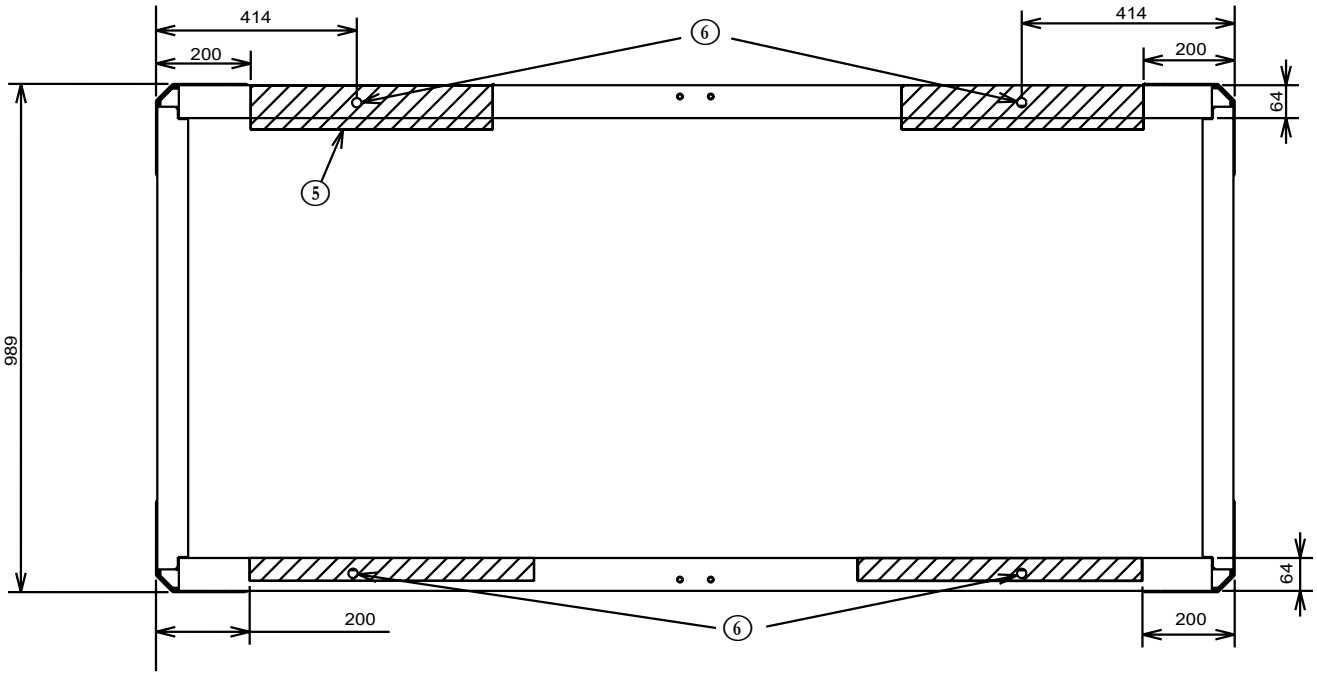

Cabinet side heater

(5) 4 SYLOMER anti-vibration mounts
(6) 4 holes for floor mounting

Models	Dimensions in mm			
	(5)			(6)
	Length	Width	thickness	Ø
700V - 1200V	400	70	25	20,2
1400V - 1600V	700	50	25	

ANTI-VIBRATION MOUNTS (OPTION)

1800V to 2400V models

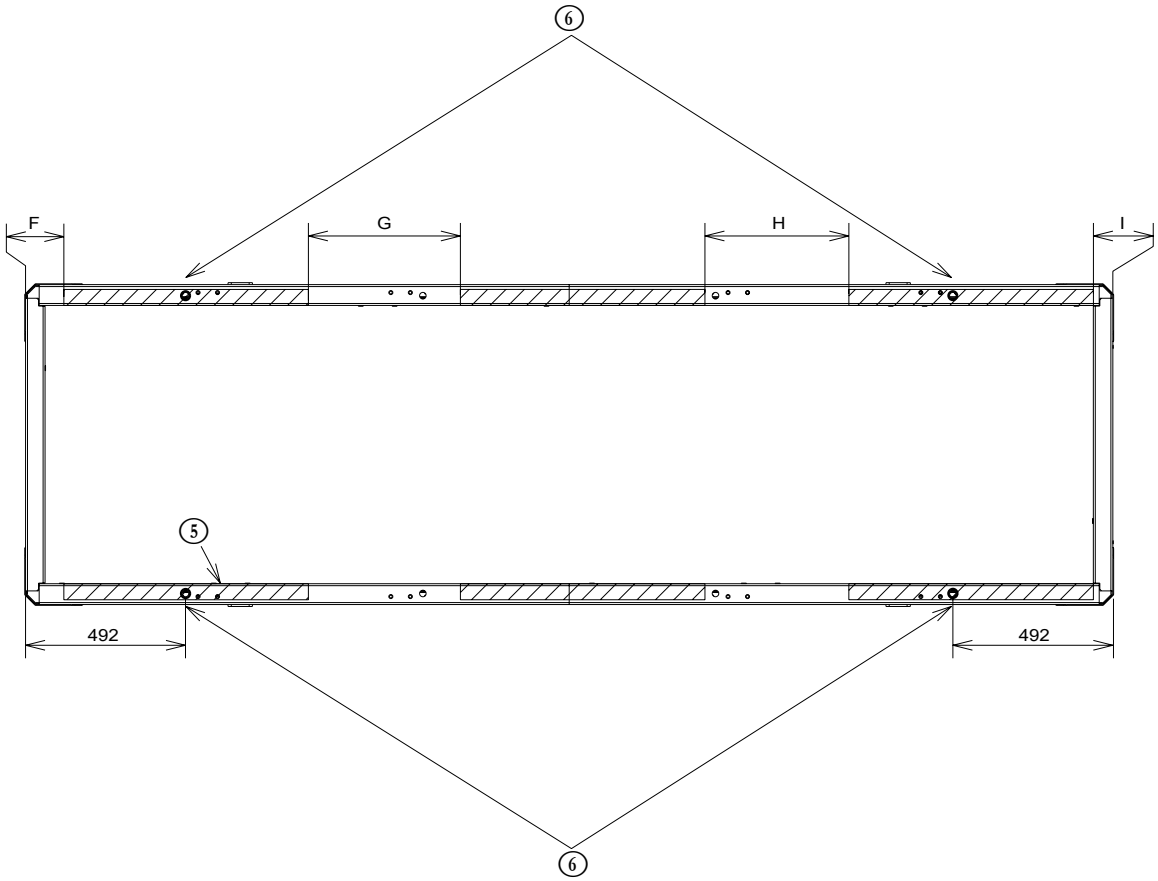

(5) 6 SYLOMER anti-vibration mounts
(6) 4 holes for floor mounting

Models	Dimensions (mm)							
	F	G	H	I	(5)			(6)
					Length	Width	thickness	Ø
1800V	100	440	585	125	700	50	25	20,2
2100V	100	585	440	125				
2400V	125	440	585	100				

Cooling schematic installation diagram

Cooling installation with drycooler

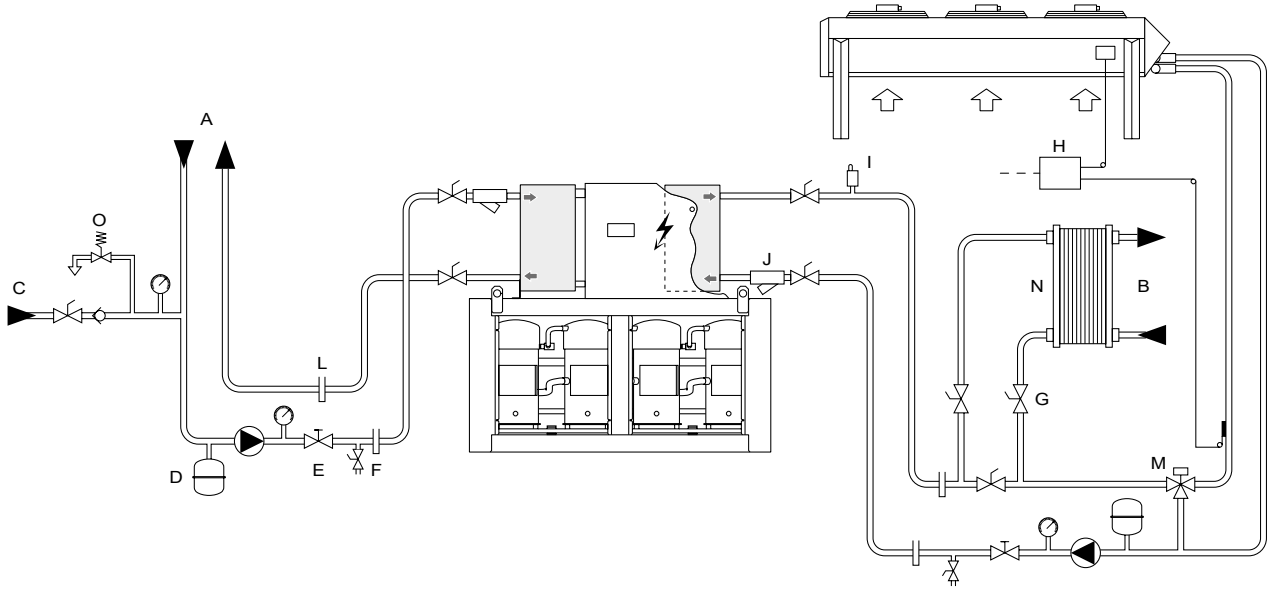

A	Chilled water circuit	F	Drain	L	Thermowell
B	Recovery water circuit	G	Shut-off valve	M	3-way hydraulic valve
C	Water top-up	H	Temperature controller	N	Cleanable exchanger
D	Expansion vessel	I	Air purge	O	Safety valve
E	Control valve	J	Water filter (obligatory)		

Heating and cooling schematic installation diagram

Cooling operation

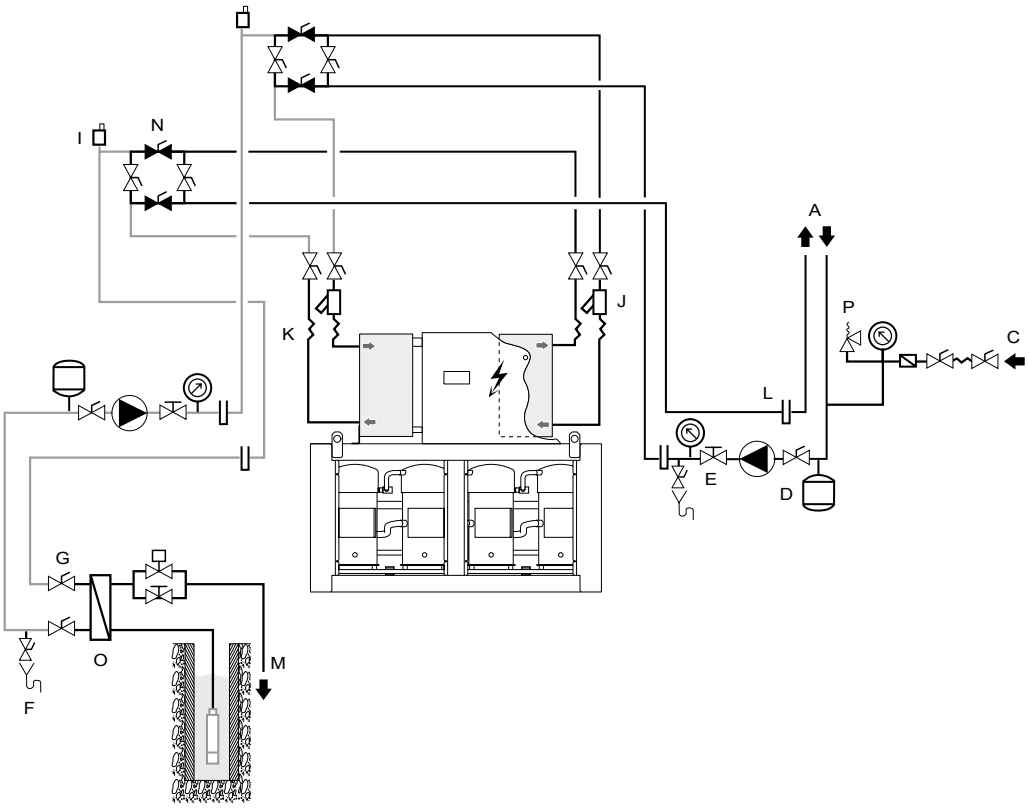

A	Chilled water or hot water circuit	J	Water filter (obligatory)
C	Water filling	K	Water hoses (obligatory)
D	Expansion vessel	L	Thermowell
E	Control valve	M	Well discharge
F	Drain	N	Hydraulic valve
G	Shut-off valve	O	Cleanable heat exchanger
I	Air bleed valve	P	Safety valve

Heating and cooling schematic installation diagram

Heating operation

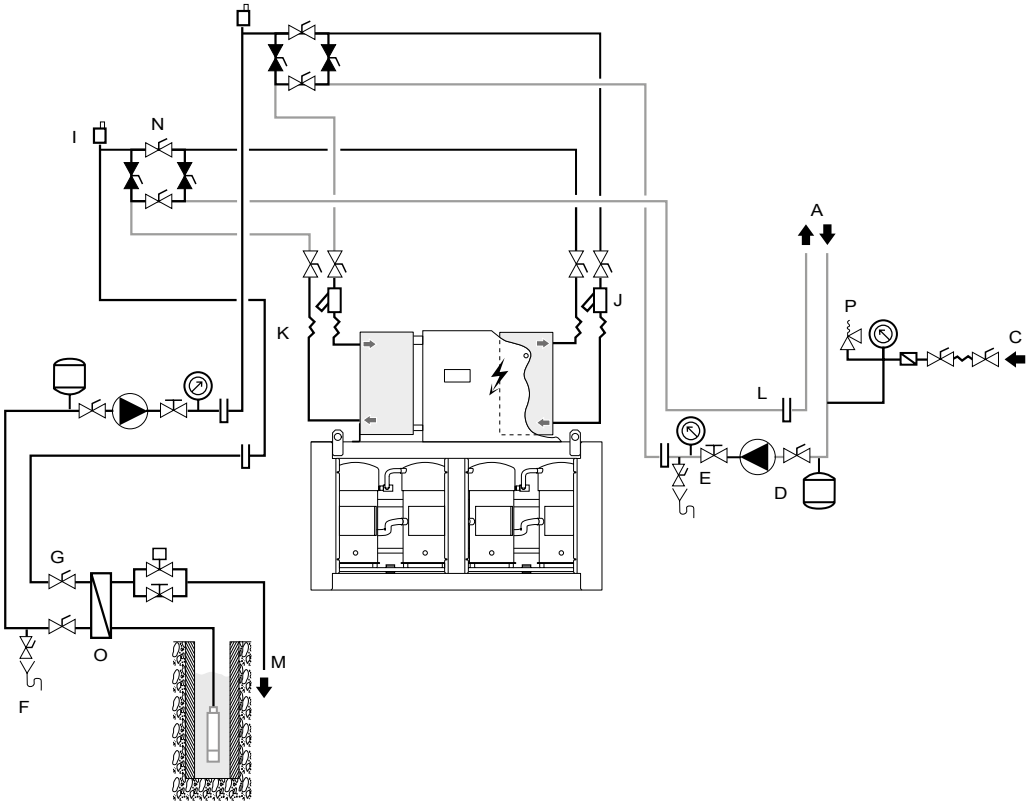

A	Chilled water or hot water circuit	J	Water filter (obligatory)
C	Water filling	K	Water hoses (obligatory)
D	Expansion vessel	L	Thermowell
E	Control valve	M	Well discharge
F	Drain	N	Hydraulic valve
G	Shut-off valve	O	Cleanable heat exchanger
I	Air bleed valve	P	Safety valve

INSTALLATION RECOMMENDATIONS

Water quality criteria to be respected

Warning: It is essential that an 800-micron water filter be placed on the unit's water inlet during installation.

The quality of the water used has a direct impact on the correct and compliant operation of the machine and its service life. This is particularly true if the water used clogs or corrodes components or promotes the growth of algae or micro-organisms.

The water must be tested to determine whether it is suitable for the unit.

It is also tested to determine whether chemical treatment is necessary and will suffice to make it of acceptable quality.

The results of the analysis must confirm whether the site's water is compatible with the various materials used on the CIAT unit's circuit:
- ***99.9% copper tubes brazed with copper and silver,***
- ***Threaded bronze couplings or flat steel flanges, depending on the unit model,***
- ***Plate heat exchangers and AISI 316/DIN 1.4401 stainless steel connections brazed with copper and silver.***

Warning: failure to follow these instructions will result in the immediate voiding of the unit's warranty.

Lifting and handling operations.

Lifting and handling operations

The utmost safety precautions must be taken when lifting and handling the unit.

Always follow the lifting diagram affixed to the unit and in the user manual (Installation, Operation, Commissioning and Maintenance).

Before attempting to lift the unit, make sure the path leading to its intended location is free from obstacles.

Always keep the unit vertical when moving it. Never tip it or lie it on its side.

Choosing a location for the unit

DYNACIAT POWER TM units are designed for installation in a machine room.

Precautions should be taken to protect it from freezing temperatures.

Special attention should be paid to ensure sufficient free space (including at the top) to allow maintenance.

The unit must be placed on a perfectly level, fireproof surface strong enough to support it when ready for operation.

Noise pollution from auxiliary equipment such as pumps should be studied thoroughly.

Depending on the room and its structure, potential noise transmission routes should be studied, with assistance from an acoustical engineer if necessary, before installing the unit.

Flexible couplings must be placed over pipes (available as options).

Machine room ventilation

According to the regulations in force in the place in which the machine is to be installed, the machine room must comply with certain ventilation rules for fresh air to ensure there is no risk of discomfort or hazard in the event of a refrigerant leak.

Fitting accessories supplied separately

A number of optional accessories may be delivered separately and installed on the unit on site.

Always follow the instructions in the user manual (Installation, Operation, Commissioning and Maintenance).

Electrical connections

Always follow the instructions in the user manual (Installation, Operation, Commissioning and Maintenance).

All information concerning electrical connections is stated on the wiring diagrams provided with the unit. Always follow this information to the letter.

Electrical connections must be made in accordance with best current practices and applicable standards and regulations.

Electrical cable connections to be made on-site:
- Electrical power supply to unit
- Contacts available as standard enabling the machine to be controlled remotely (optional).

It should be noted that the unit's electrical system is not protected against lightning strikes.

Therefore, devices to protect against transient voltage surges must be installed on the system, and

inside the power supply unit on site.

INSTALLATION RECOMMENDATIONS

Pipe connections

Always follow the instructions in the user manual (Installation, Operation, Commissioning and Maintenance).

All pipes must be correctly aligned and slope toward the system's drain valve.

Pipes must be installed and connected to allow sufficient access to the panels and fitted with heat insulation.

Pipe mountings and clamps must be separate to avoid vibrations and ensure no pressure is placed on the unit.

Water flow shut-off and control valves must be fitted when the unit is installed.

Pipe connections to be made on-site:
- Water supply with pressure-reducing valve
- Evaporator, condenser and drain

Accessories essential to any hydraulic circuit must also be installed, such as:
- A thermostatically controlled valve for controlling the flow rate of cooling water placed at the condenser water inlet or outlet.
- Water expansion vessel
- Drain nozzles at pipe low points
- Exchanger shut-off valves equipped with filters
- Air vents at pipe high points
- Check the system's water capacity (install a buffer water tank if necessary)
- Flexible couplings on exchanger inlets and outlets
- Thermometers on each water inlet and outlet to allow all the necessary checks during commissioning and maintenance.

Warning:
- ***Pressure in the water circuits below 4 bar.***
- ***Place the expansion vessel before the pump.***
- ***Do not place any valves on the expansion vessel.***
- ***Make sure the water circulation pumps are placed directly at the exchanger inlets.***
- ***Make sure the pressure of the water drawn in by the circulation pumps is greater than or equal to the required minimum NPSH, particularly if the water circuits are "open".***
- ***Test the water quality criteria in accordance with the relevant technical requirements.***
- ***Take the necessary precautions to protect the unit and hydraulic system from freezing temperatures (e.g. allow for the possibility of draining the unit). If glycol is added to prevent freezing, check its type and concentration before system start-up.***
- ***Before making any final hydraulic connections, flush the pipes with clean water to remove any debris in the network.***

System start-up

Units must be commissioned by CIAT or a CIAT-authorised firm.

Always follow the instructions in the user manual (Installation, Operation, Commissioning and Maintenance).

List of system start-up checks (non-exhaustive):
- Correct positioning of unit
- Power supply protections
- Phases and direction of rotation
- Wiring connections on unit
- Direction of water circulation in unit
- Cleanliness of water circuit
- Water flow rate at specified value
- Pressure in the refrigerating circuit
- Direction of rotation of compressors
- Water pressure drops and flow rates
- Operating readings.

Maintenance operations

Specific preventive maintenance operations must be carried out regularly on the units by

CIAT-authorised firms.

The operating parameters are read and noted on a “CHECK LIST” form to be returned to CIAT.

To do this, always refer to and follow the instructions in the user manual (Installation, Operation, Commissioning and Maintenance).

You must take out a maintenance contract with a CIAT-approved refrigeration equipment specialist. Such a contract is required even during the warranty period.

Drycoolers

CIAT **OPERA** and **VEXTRA** series drycoolers are compatible with **DYNACIAT** POWER TM **LG** units with water cooled condensers

Available in a wide range of sizes and with several ventilation speeds, the **OPERA** and **VEXTRA** can be adapted to the sizing and acoustic constraints of each site

Opera

Vextra

CONNECT 2 CONTROL

USER-FRIENDLY INTERFACE CONSOLE

- LCD display (4 lines of 24 characters each) Pressure and temperature readings
- Diagnosis of fault and operating statuses
- Master/slave control of two machines in parallel
- Fault memory management
- Pump management
- Remote control
- Time schedules

REMOTE BluEdge® MACHINE SUPERVISION

Full Serenity with:

- Monitoring of machine operation (operation overviews and curves, alarm logs).
- E-mail alerts for alarms (optional SMS alerts).
- Remote update.
- Access to a log of machine operation data.
- Remote advice for using BluEdge®.
- System start-up and operating readings.

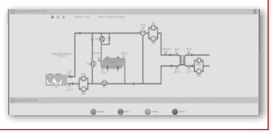

PRODUCT FUNCTIONALITY

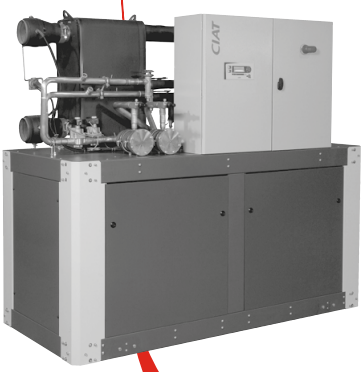

Via potential-free (dry) contact

POTENTIAL-FREE (DRY) CONTACTS AVAILABLE AS STANDARD

Inputs:

- Automatic pump and machine control
- Selection of setpoints 1 / 2
- Setpoint adjustable by 4-20 mA signal
- Heating/cooling mode selection
- Compressor load shedding

Outlets:

- General fault reporting
- Fault reporting on each circuit
- Pump control

Additional outlets available as options:

- Water flow fault
- Frost protection fault
- Pump fault
- Compressor lubrication fault
- Fan fault
- Low and high pressure fault
- Compressor overheating fault
- Discharge temperature fault
- Compressor operating status

Customer CMS COMMUNICATION

Via BUS communication

OUTLET AS STANDARD

- Open MODBUS-JBUS RS 485 protocol (standard)
- MODBUS-ETHERNET TC/IP protocol (standard)
- LONWORKS protocol (option)
- BACNET protocol (option)

CIAT SYSTEM FUNCTIONALITY

Communication with Hysys system (generator, transmitter, air handling unit), controlled by an Easy CIATControl or Smart CIATControl touch tablet.

- **Logging** of consumption data and temperatures
- **Optimal Water®**: optimisation of producer performance based on building requirements
- **Optimal Stop and Start**: optimisation of the building restart time

Smart CIATControl

Communication with CIAT Energy pool controlled by Power'Control.

Integrated Power'Control:

- Energy optimisation of refrigeration and heating using several generators,
- Manages free cooling capacity
- Uses heat recovery to supply domestic hot water.

Power'Control

Order No: NA22.679A. Supersedes order No: NA20.679A.
Manufacturer reserves the right to change any product specifications without notice.

Manufacturer: Carrier SCS, Montluel, France.
Printed in the European Union.